30-lb A.S.C.E. specifications

Scale: Drawing is actual size

LBFoster
Rail Products
www.lbfoster.com
866.523.7245

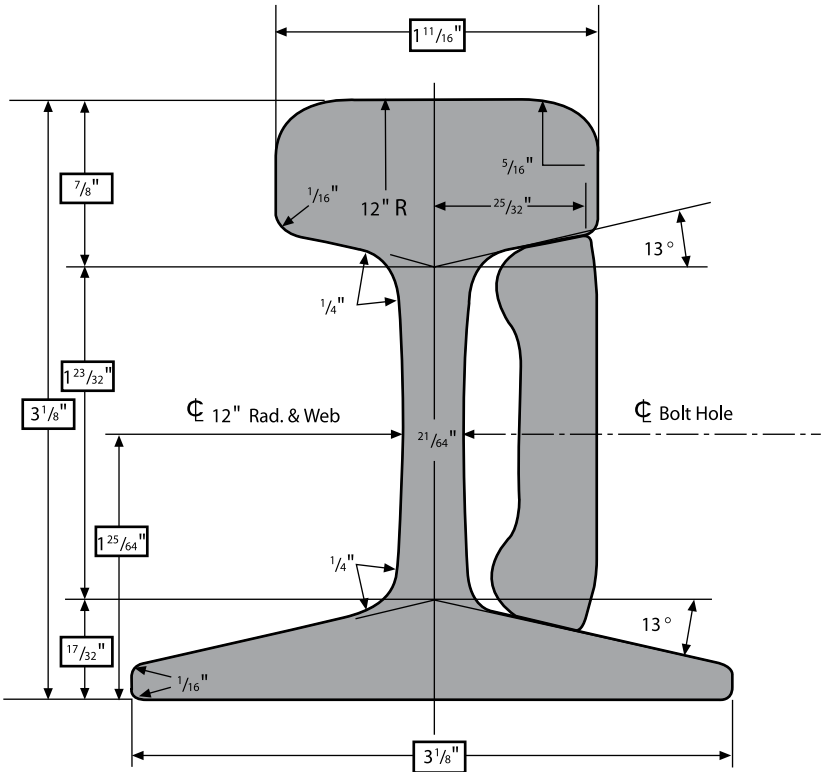

SPLICE BAR

16-1/8" length, 5.5 lbs. per pair. 5/8" x 2-1/2" button head, oval neck track bolt with heavy square nut.

	30 FT	40 FT
LBS/FT (Nominal)	2.88	2.88
Pairs		
Net Ton	6.7	5.0
Mile of Track	352.0	264.0

RAIL (30 FT, 40 FT)

Area In ^{2}	3.00
Sec. Modulus In ^{3} Head	2.55
Mom. Inertia In ^{4}	4.10
Lbs/Yd (Nominal)	30.0
Track Feet/Net Ton	100.0
Net Tons/Track Mile	52.8