105-lb CRANE RAIL specifications

Scale: Drawing is actual size

LBFoster
Rail Products
www.lbfoster.com
866.523.7245

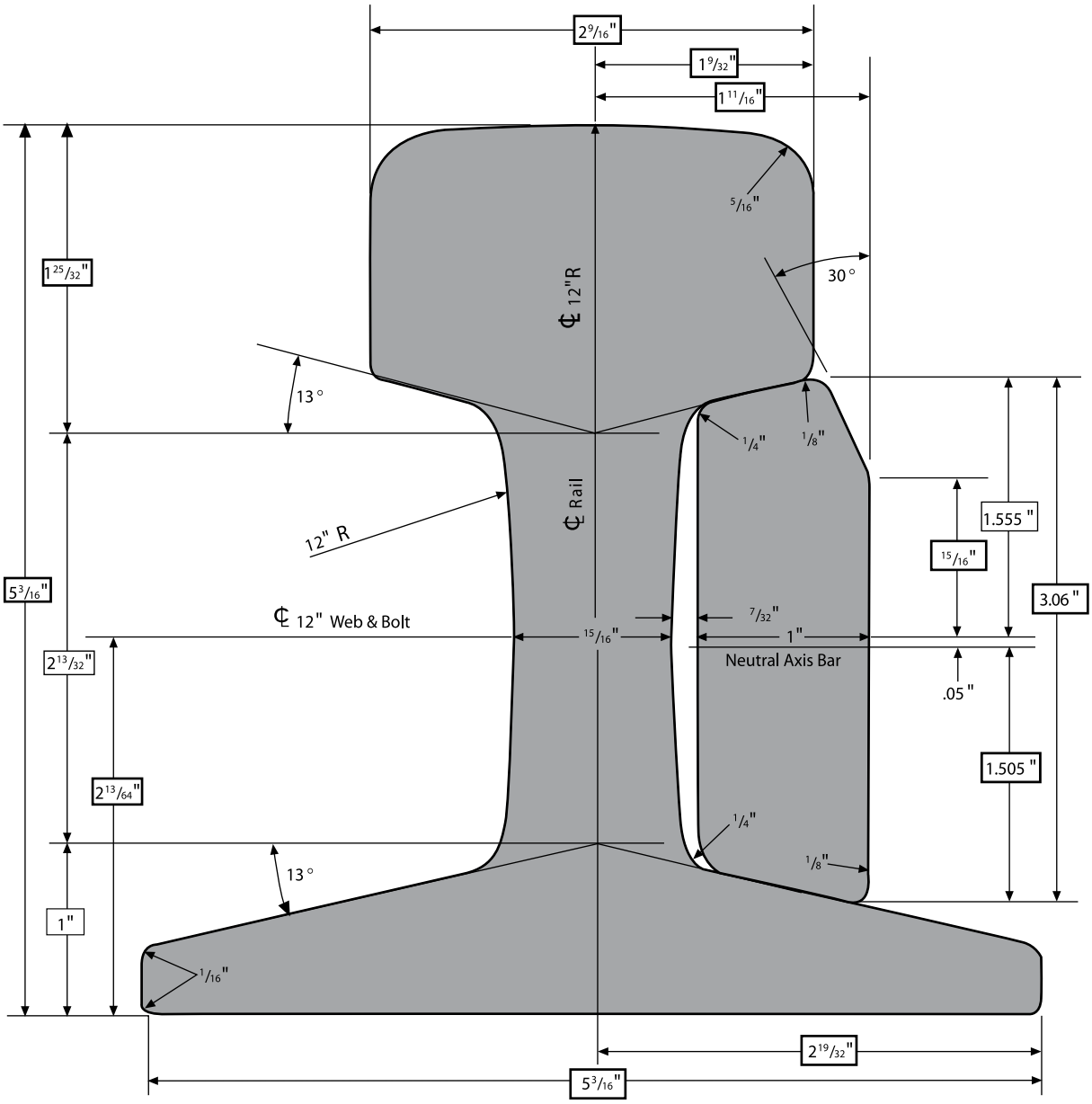

SPLICE BAR

34" length, 52 lbs. per pair. Hex Head Bolts 7/8" x 5" and Heavy Hex Nuts — Heat Treated

Area In ^{2}	2.80
Lbs/Ft	9.50
Lbs/Bar	25.8

RAIL (39 FT, 60 FT, 78 FT)

Area In ^{2}		10.30
Sec. Modulus In ^{3}	Head	12.39
	Base	14.28
Mom. Inertia In ^{4}		34.41
Lbs/Yd (Nominal)		105.0